STM32-H152

Rev. B

COPYRIGHT(C) 2011, OLIMEX Ltd.
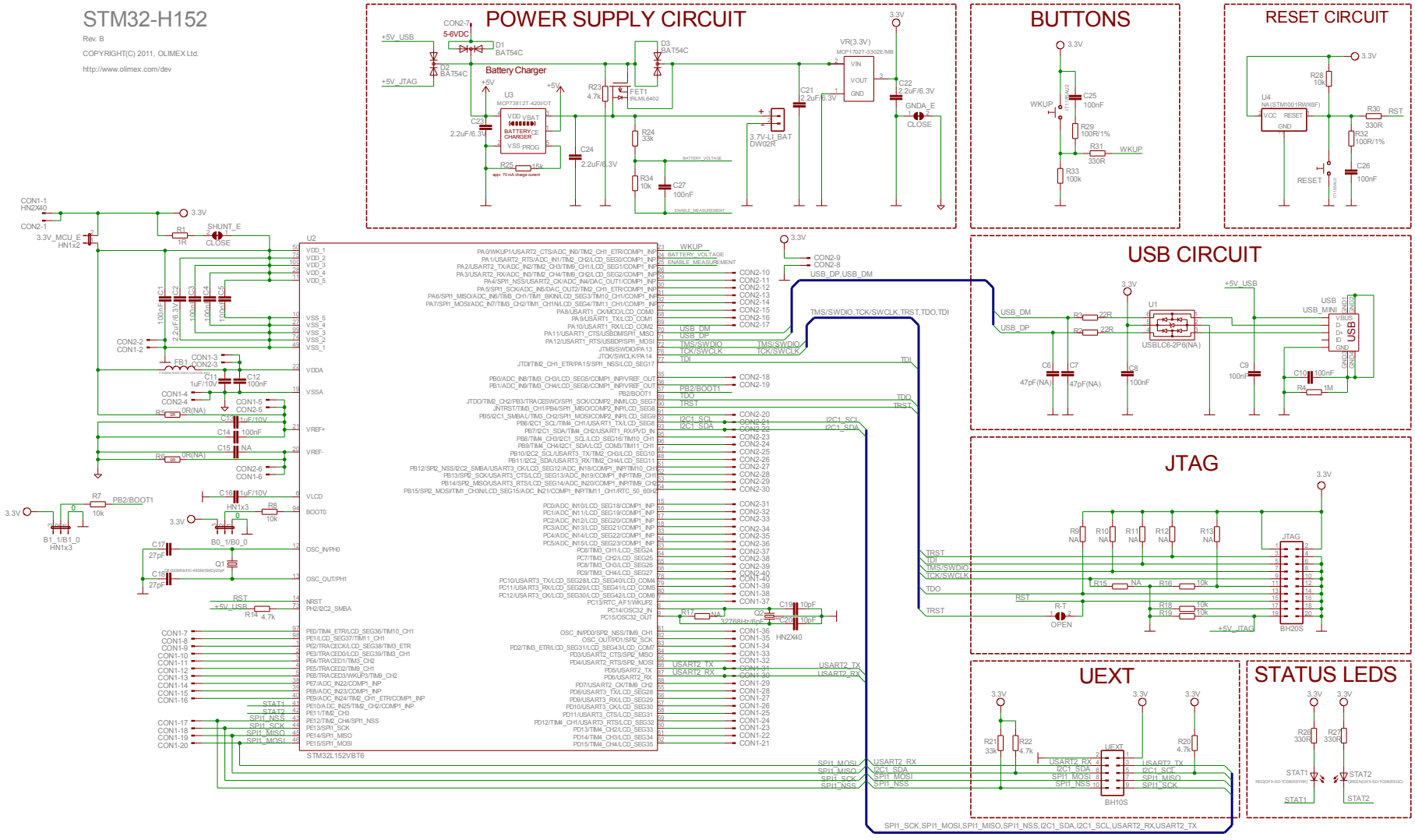
http://www.olimex.com/dev