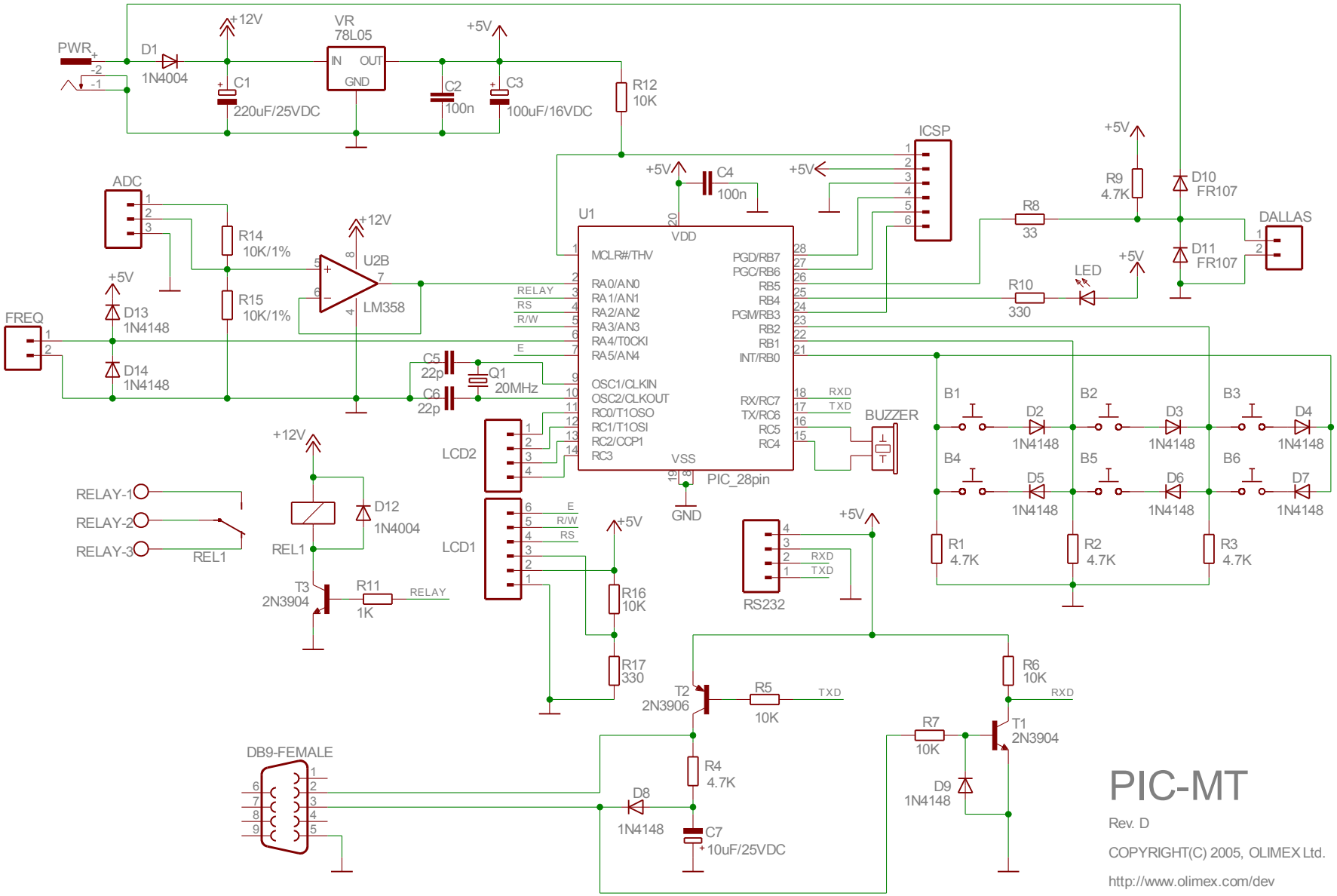
PWR
D1
1N4004
+12V
C1
220uF/25VDC
VR
78L05
IN
OUT
GND
C2
100n
+5V
C3
100uF/16VDC
R12
10K
ICSP
C4
100n
U1
VDD
MCLR#/THV
RA0/AN0
RA1/AN1
RA2/AN2
RA3/AN3
RA4/T0CKI
RA5/AN4
OSC1/CLKIN
OSC2/CLKOUT
RC0/T1OSO
RC1/T1OSI
RC2/CCP1
RC3
PGD/RB7
PGC/RB6
RB5
RB4
PGM/RB3
RB2
RB1
INT/RB0
RX/RC7
TX/RC6
RC5
RC4
VSS
PIC_28pin
GND
RELAY
RS
R/W
E
RXD
TXD
ADC
R14
10K/1%
R15
10K/1%
U2B
LM358
FREQ
D13
1N4148
D14
1N4148
C5
22p
C6
22p
Q1
20MHz
LCD2
LCD1
BUZZER
R8
33
R10
330
LED
R9
4.7K
D10
FR107
D11
FR107
DALLAS
B1
B2
B3
B4
B5
B6
D2
D3
D4
D5
D6
D7
1N4148
R1
4.7K
R2
4.7K
R3
4.7K
RELAY-1
RELAY-2
RELAY-3
REL1
D12
1N4004
T3
2N3904
R11
1K
RS232
R16
10K
R17
330
T2
2N3906
R5
10K
R6
10K
R7
10K
T1
2N3904
D9
1N4148
R4
4.7K
D8
1N4148
C7
10uF/25VDC
DB9-FEMALE
PIC-MT
Rev. D
COPYRIGHT(C) 2005, OLIMEX Ltd.
http://www.olimex.com/dev